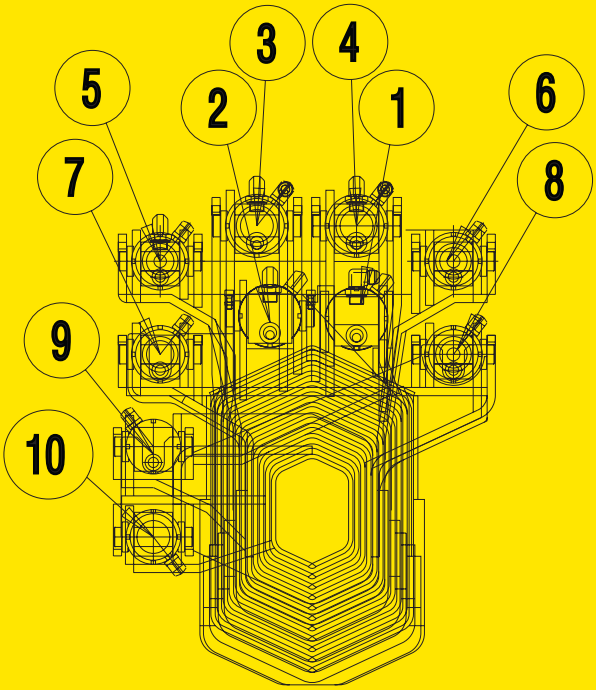
3
4
5
2
1
6
7
8
9
10

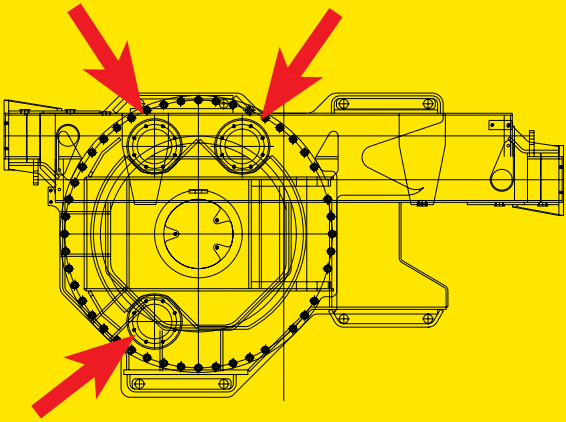

RADIO REMOTE STANDARD

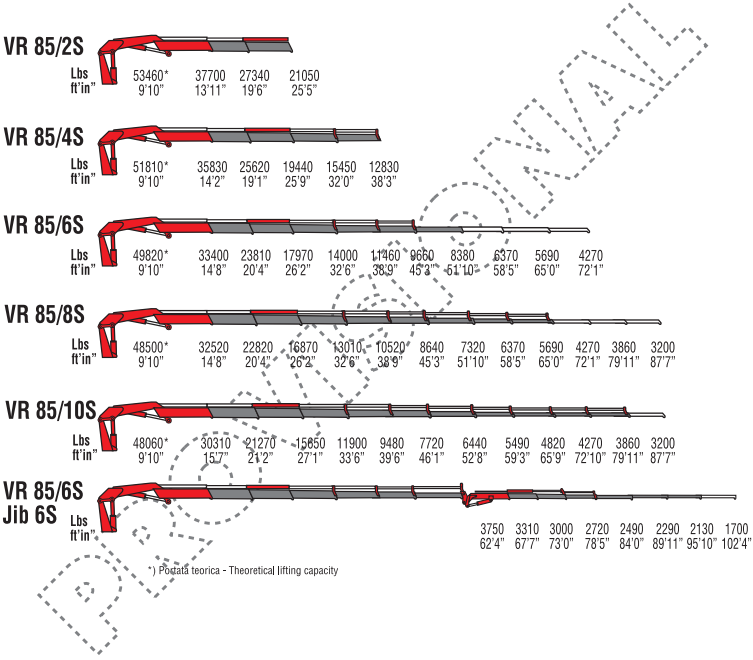

MODELLI MODELS	MOMENTO LIFTING MOMENT	SBRACCIO ORIZ. HORIZ. EXTENSION	PORTATA AL MAX. SBRACCIO MAX. REACH LIFTING CAPACITY	ANGOLO DI ROTAZIONE SLEWING ANGLE	PESO WEIGHT	DIMENSIONE DIMENSION
	Tft Lbs	**ft'in"**	**Lbs**	**°**	**Lbs**	**inches WxHxD**
VR 85/2s	525800	25'5"	21050	ENDLESS	14660	100x97x62
VR 85/4s	-	38'3"	12830	ENDLESS	16090	100x97x62
VR 85/6s	-	51'10"	8380	ENDLESS	17420	100x97x68
VR 85/8s	-	65'0"	5690	ENDLESS	18520	100x99x69
VR 85/10s	-	79'11"	3860	ENDLESS	20110	100x104x69
VR 85/6SJ6	-	95'10"	2130	ENDLESS	21830	100x111x73